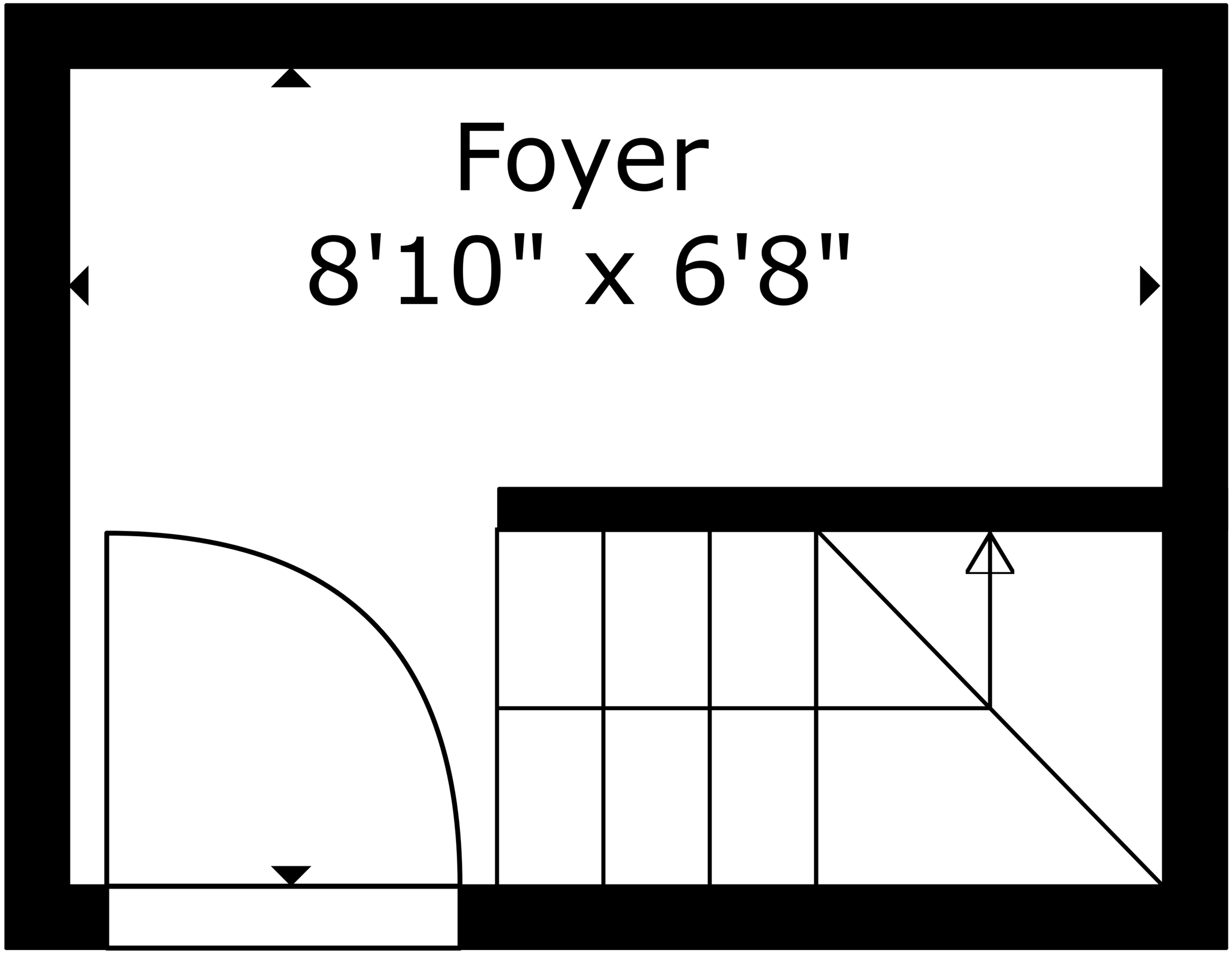

Floor Plan Created By Cubicasa App. Measurements Deemed Highly Reliable But Not Guaranteed.

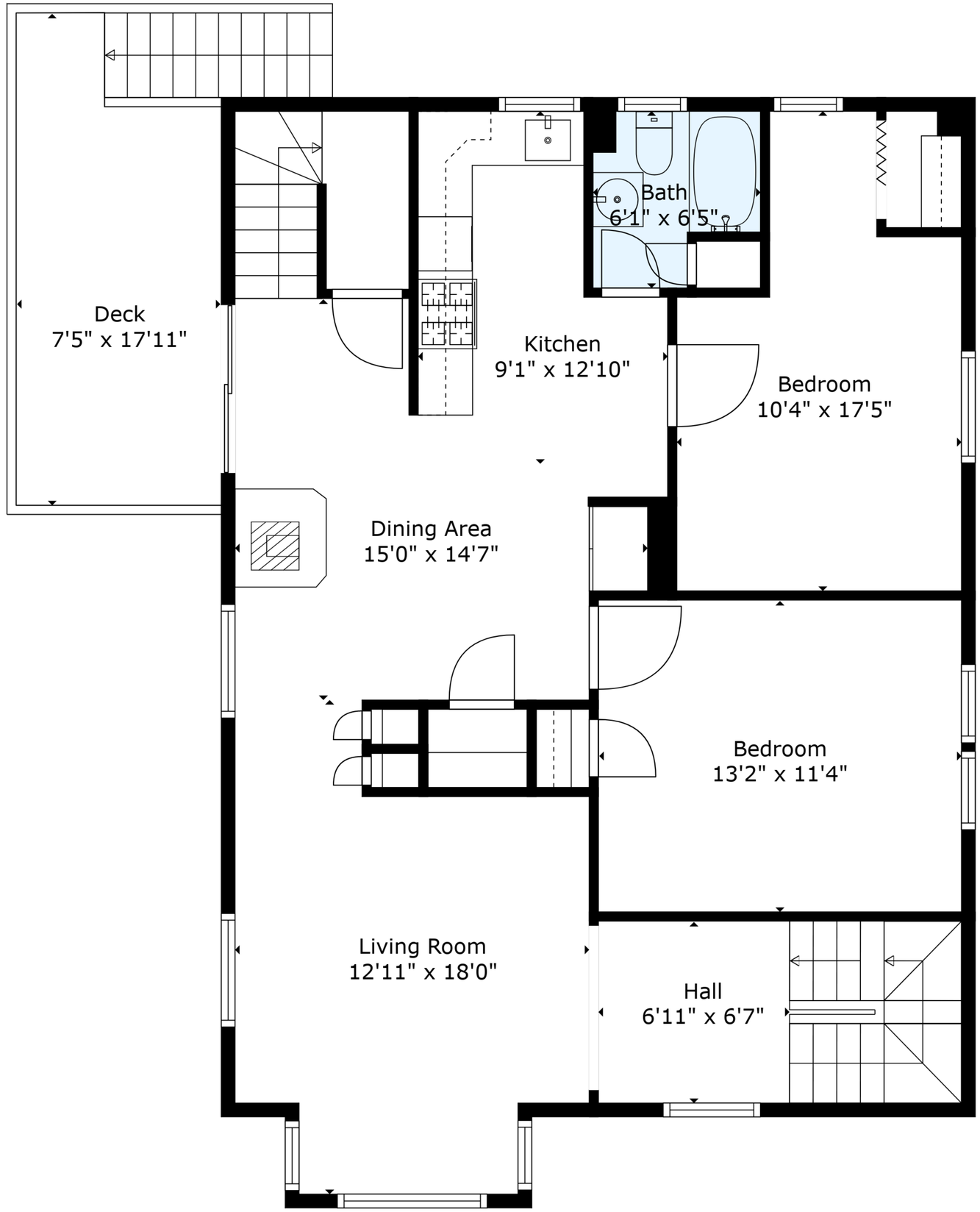

Floor Plan Created By Cubicasa App. Measurements Deemed Highly Reliable But Not Guaranteed.

N

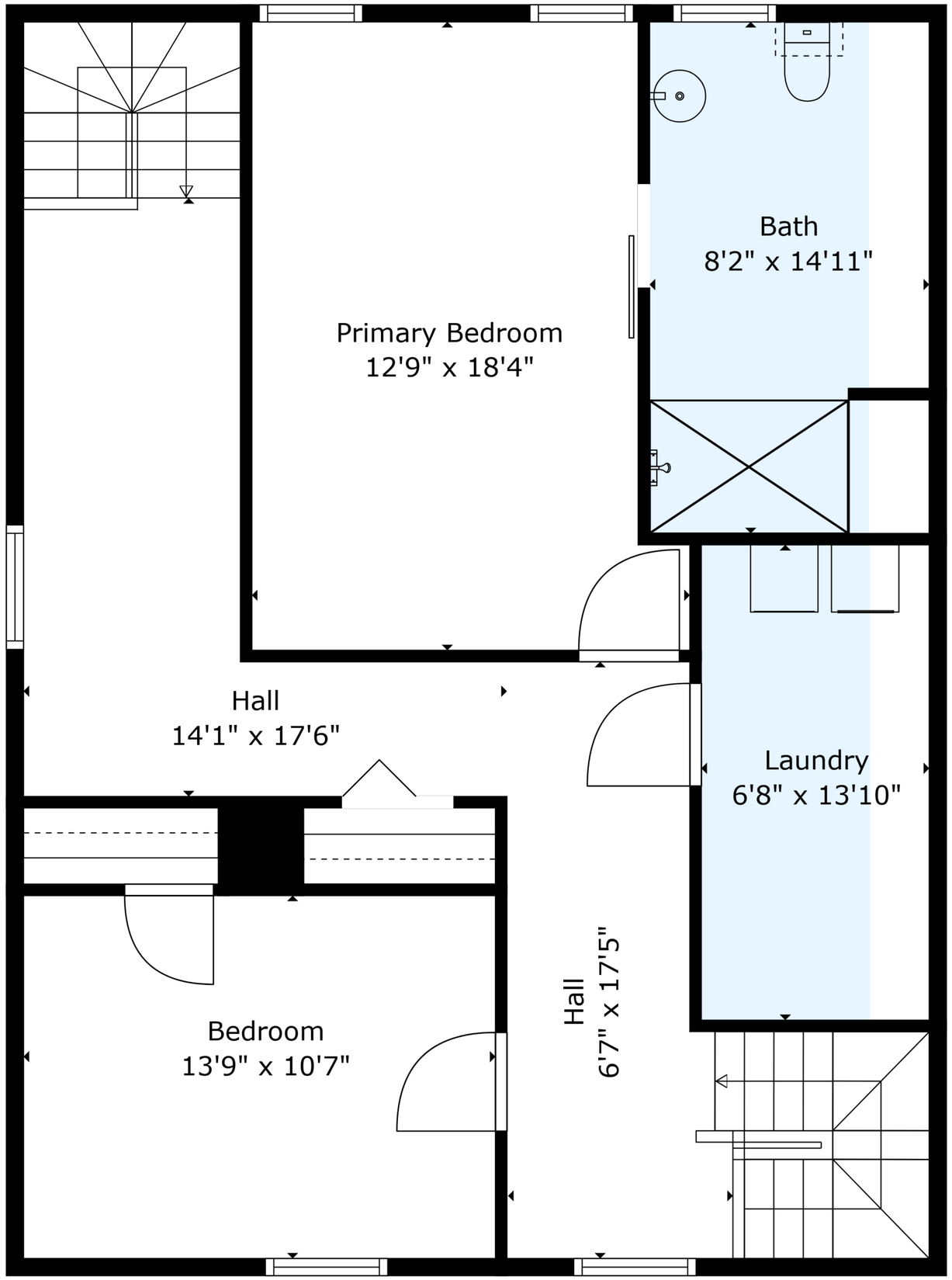

Floor Plan Created By Cubicasa App. Measurements Deemed Highly Reliable But Not Guaranteed.

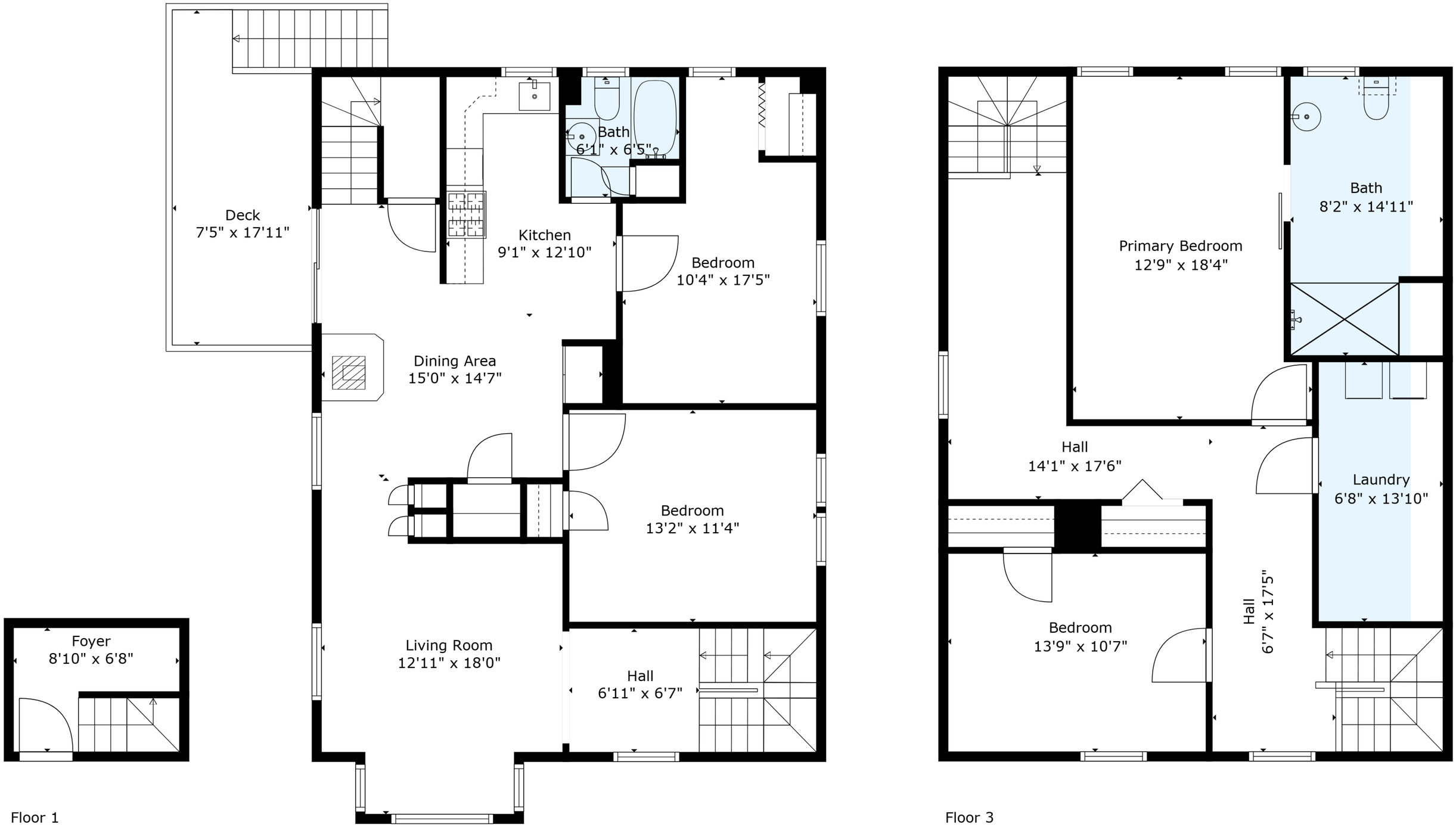

Floor 1

Floor 2

Floor 3

Floor Plan Created By Cubicasa App. Measurements Deemed Highly Reliable But Not Guaranteed.